ematec® AG * D-87766 Memmingerberg * Telefon +498331/9487-0 * Internet http://www.ematec.de * e-mail info@ematec.de

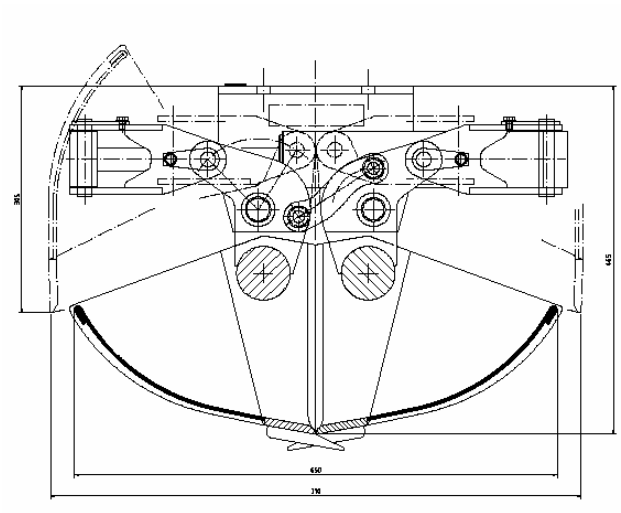

15 S Clamshell

Clamshell for civil engineering, loading, landscaping

Special features

- 1 cylinder, lying
- Robust design, powerful bite
- Shell body made of fain-grain structural steel, edges from Hardox
- Bolted-on grapple teeth come standard
- Optimum power-to-weight ratio
- Low overall height
- Robust bearings with special brass bushes and hardened and tempered pins
- Wide range of accessories available

Technical data

Opening width	710	mm
Shell width	250 - 500	mm
Volume approx.	30 - 60	litres
Operating pressure max.	300	bar
Weight complete, approx.	75 - 100	kg
Load-carrying capacity	1.0	to
For excavator service weight	1.0 - 2.5	to